MOLD NO.	RFQ NO.: FCL004

REV.	DESCRIPTION	APPD.	DATE
A	INITIAL RELEASED	WANG	07/24/14'

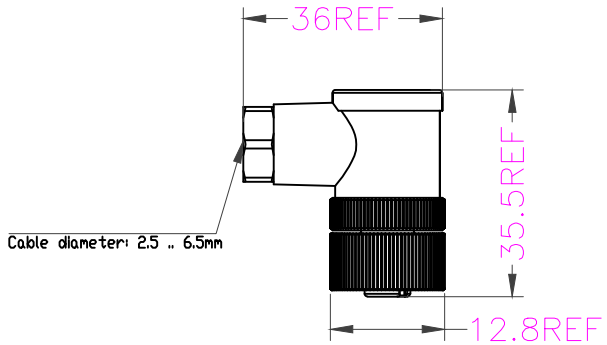

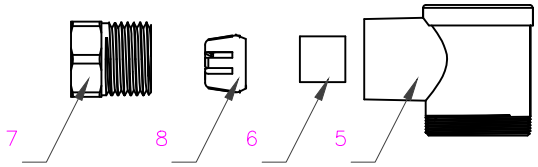

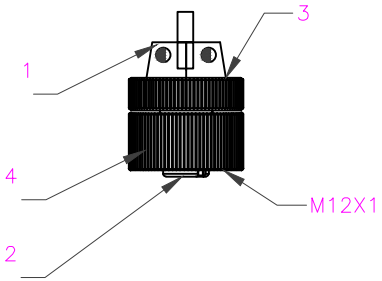

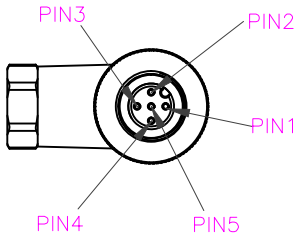

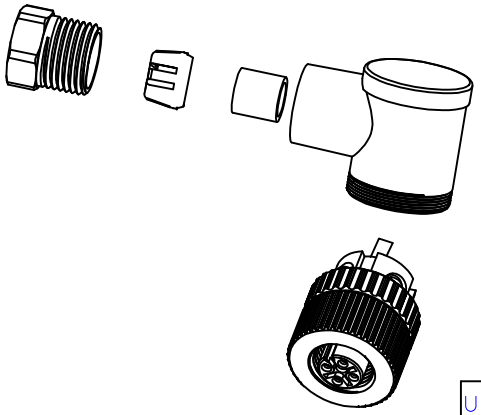

Electrical
Rating voltage: 30V AC/36V DC ,
Insulation resistance: >100MΩ
Rating current : 4A
Contact resistance of the connector≤10mΩ
Degree of protection: IP67
Operating temperature: -25° ~ +90°

Specification
1:Insert plastic : polyamide black
2: Contacts: copper alloy gold plated
3: O-ring: nitrile black
4: Coupling nut :brass nickel plated
5: Molded body:polyamide black
6: Grommet: nitrile black
7: Cord grip body:polyamide black
8: Collect:polyamide black
ALL MATERIALS ARE RoHS COMPLIANT.

TABLE

PIN FACE VIEW	CUSTOMER P/N	ORDER P/N	ITEM
	6006788	M12F04-SW-001	1
	6006786	M12F05-SW-001	2

ITEM	PART NAME	DESCRIPTION	QTY

UNDECLARED TOLERANCE		CUS P/N:	FLECONN PRECISION INDUSTRY (CHINA) CO., LIMITED		
X.±1.0	X.°±2.0°				
.X±0.5	.X°±1.0°	PART NO.: 92042-XX	TITLE: Female connector M12x1, 4/5 pole, right-angle, Cable diameter: 2.5 .. 6.5mm		
.XX±0.2	.XX°±0.5°				
UNITS: MM		APPD.:	DWG NO.: D0044		
THESE DRAWINGS AND SPECIFICATIONS ARE THE PROPERTY OF Fleconn AND SHALL NOT BE REPRODUCED,COPIED OR USED IN ANY MANNER WITHOUT THE PRIOR WRITTEN CONSENT OF Fleconn.		CHKD.:		SCALE	SHEET	REV.
		DR.: HWJ_07/24/14'		1:1	1/1	A